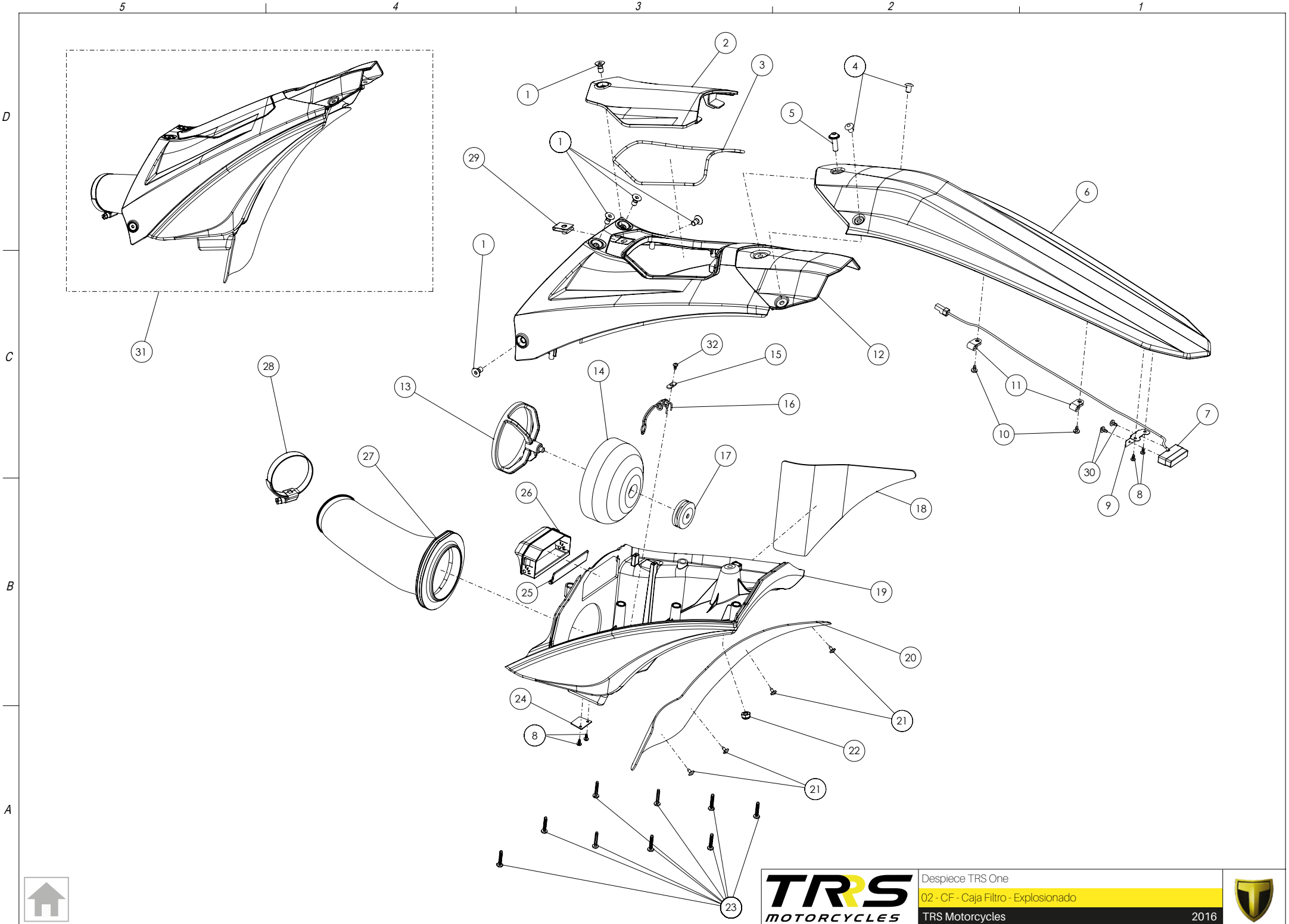

Despiece TRS One

02 - CF - Caja Filtro - Explosionado

TRS Motorcycles 2016